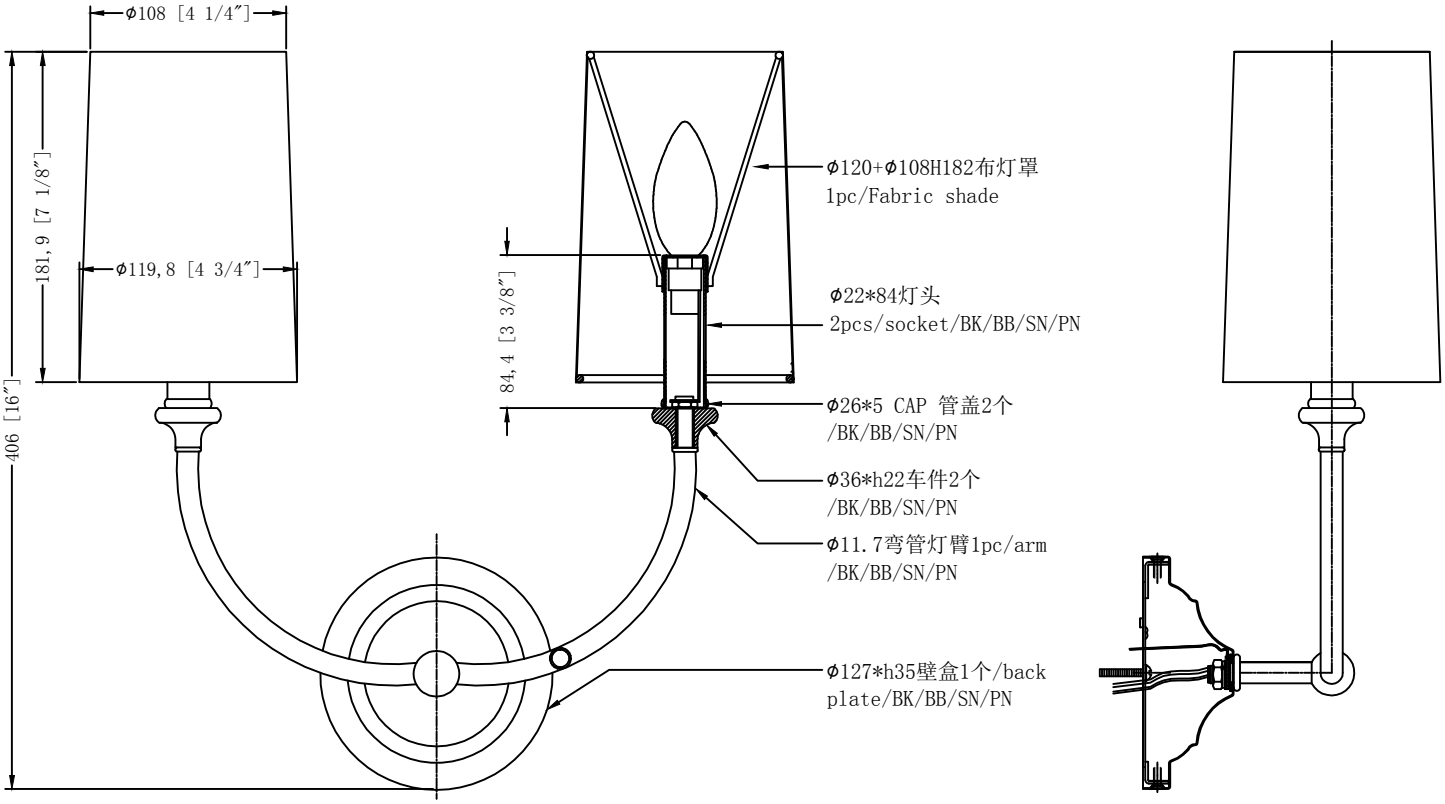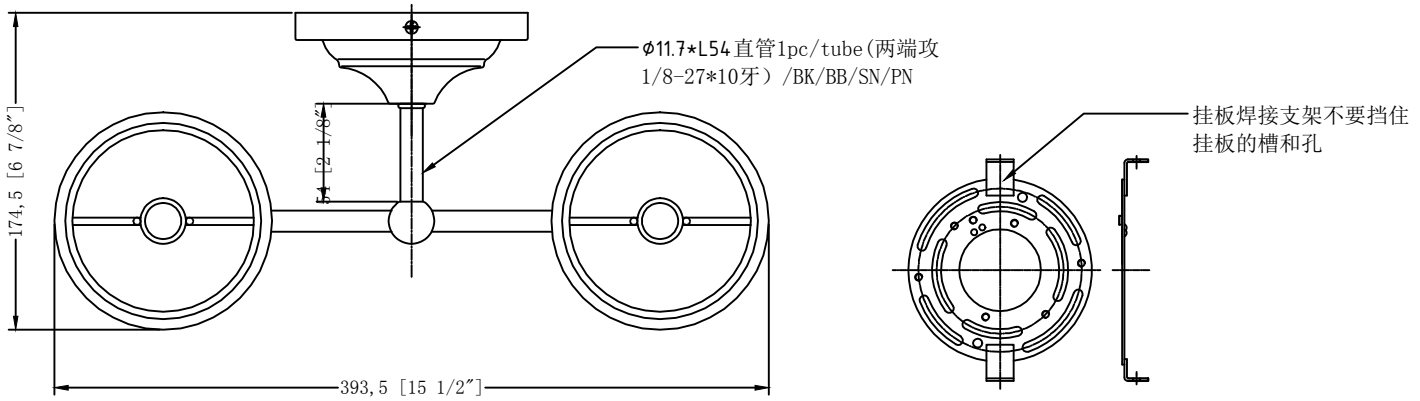Convertible item
372-2W-BK/PN/BB/SN/SG-S1
2 light wall sconce