ASSEMBLY INSTRUCTIONS

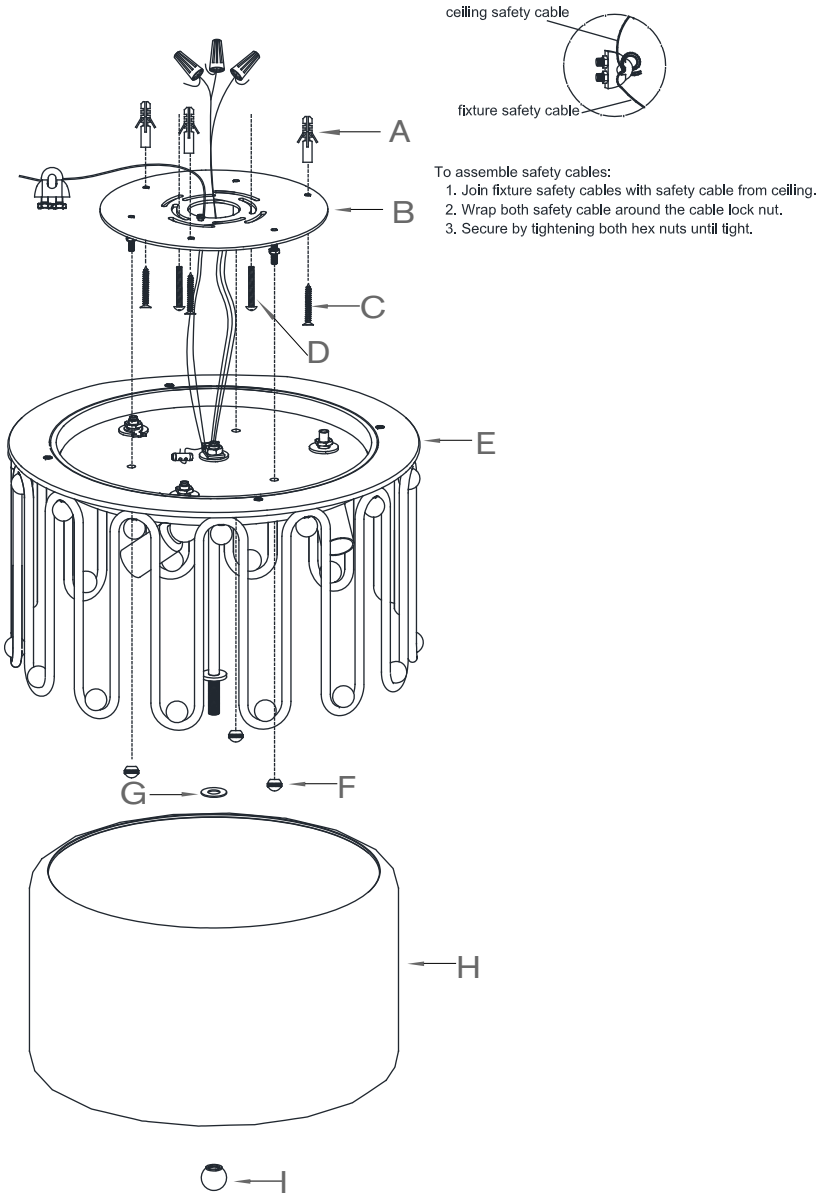

To assemble safety cables:
1. Join fixture safety cables with safety cable from ceiling.
2. Wrap both safety cable around the cable lock nut.
3. Secure by tightening both hex nuts until tight.

Molene Medium Flush Mount

Item # ARN 4022

WE RECOMMEND INSTALLATION OF THIS LIGHTING FIXTURE BE DONE BY A LICENSED ELECTRICIAN.

WARNING * SWITCH OFF THE MAIN ELECTRICAL SUPPLY FROM THE MAIN FUSE BOX/CIRCUIT BREAKER BEFORE INSTALLATION.**

INSPECT ITEM CAREFULLY BEFORE ATTEMPTING TO INSTALL. IF THERE IS ANY DAMAGE OR OBVIOUS DEFECT, DO NOT INSTALL.

ITEM MAY NOT BE RETURNED ONCE IT HAS BEEN INSTALLED.

1. Carefully remove all parts from the carton.
2. Remove mounting plate (B) from fixture base (E) by removing cap nuts (F).
3. Position mounting plate (B) on the ceiling outlet box. Mark center points for three mounting holes with a pencil on the ceiling. Remove mounting plate (B).
4. Drill small holes on each point location on the ceiling, each hole should be big enough to accommodate to the plastic anchor (A). Push plastic anchors (A) into the holes in the ceiling.
5. Affix mounting plate (B) to ceiling outlet box, aligning holes and secure by inserting mounting screws (D) to the holes of outlet box and screws (C) to the plastic anchors (A) in the ceiling.
6. Gently pull the wires from the ceiling outlet and allow the wires to hang. Thread the wires through the center hole in mounting plate (B).
7. Attach fixture steel safety cable to structural member in the wall. (Refer to the illustration)
8. Attach ground (green) wire to ground wire from wall outlet box (usually green or copper in color). Fasten both wires together with a plastic wire connector. Tightly wrap the wire connector with electrical tape. so the end of the connector is sealed. IT IS IMPERATIVE THAT THE OUTLET BOX IN YOUR HOME BE PROPERLY GROUNDED.
9. Connect neutral (white) fixture wire coming from fixture base to neutral (usually white) outlet wire. Fasten both wires together with a plastic wire connector. Tightly wrap the wire connector with electrical tape.
10. Repeat the procedure with the hot (black) wires. Always make sure that no wire strands are left outside the connectors. DO NOT REVERSE THE HOT AND NEUTRAL CONNECTIONS OTHERWISE SAFETY WILL BE COMPROMISED.
11. Attach fixture base (E) to mounting plate (B), letting the rods on mounting plate (B) pass through the holes on fixture base (E) and secure with cap nuts (F).
12. Insert light bulbs (not included) into sockets.
13. Remove finial (I) from center rod on fixture base (E), attach glass shade (H) to fixture base (E), letting the rod pass through the fiber washer (G) & the center hole of glass shade (H) and secure with finial (I).
14. Installation is complete. Restore power and test fixture.

*** Clean with a dry, soft cloth only. Use no harsh abrasives or chemical agents.

Intertek DAMP

VISUAL COMFORT & CO. Est. 1987